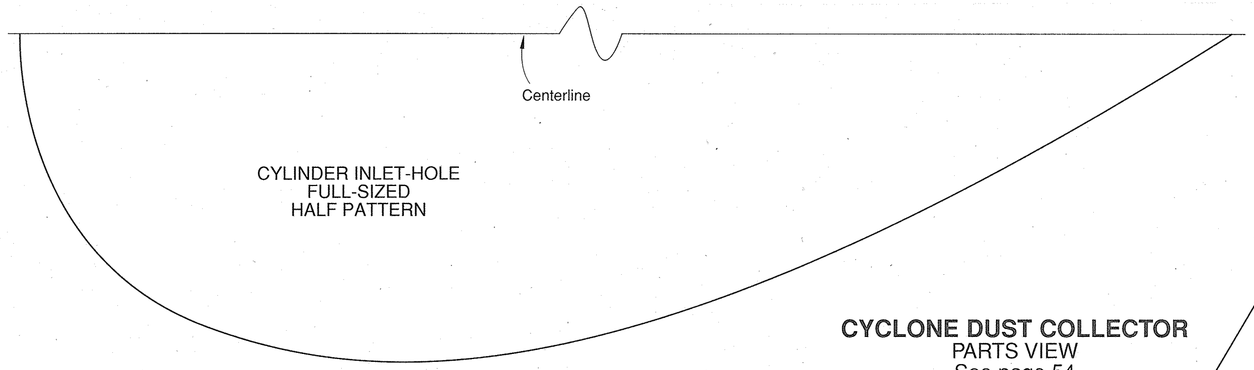

CYCLONE DUST COLLECTOR

PARTS VIEW

See page 54

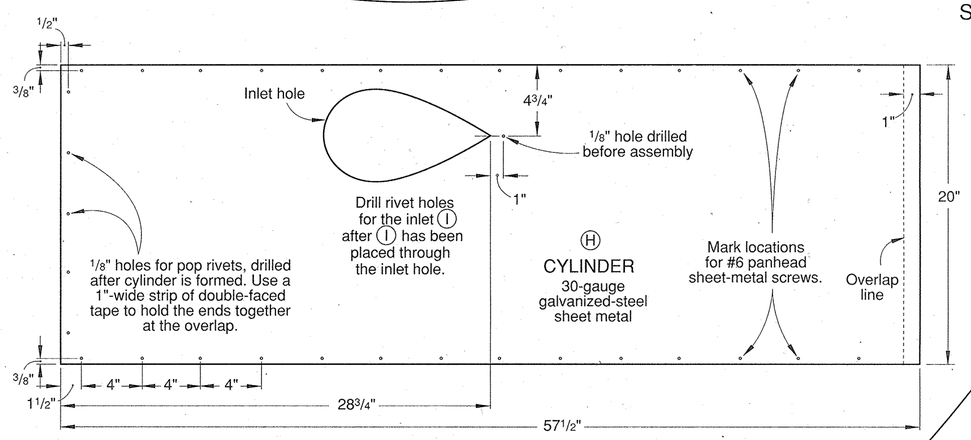

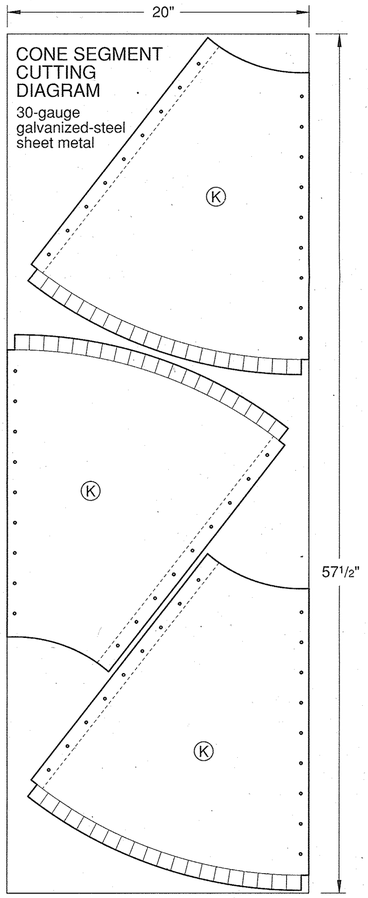

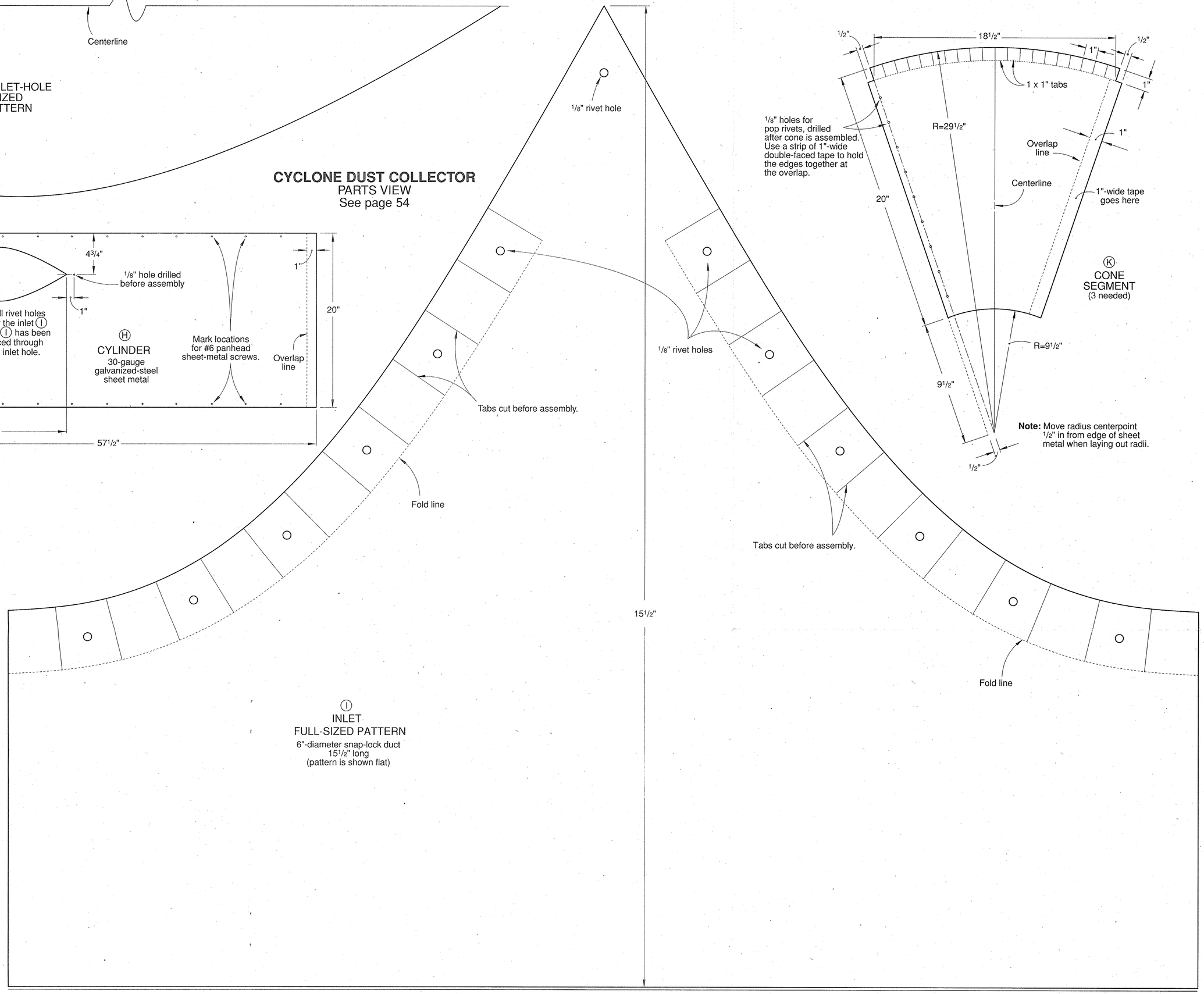

Note: Move radius centerpoint 1/2" in from edge of sheet metal when laying out radii.